JONATHAN ADLER

CLARIDGE

676B

Tear Drop Table Lamp

1-100W Max.

Bulb Type: A

Switch: Full Range Dimmer

Lead Crystal w/ Polished Nickel Accents

Black Silk Dupioni Shade w/ Rolled Edge Hem

SHADE OPTION:
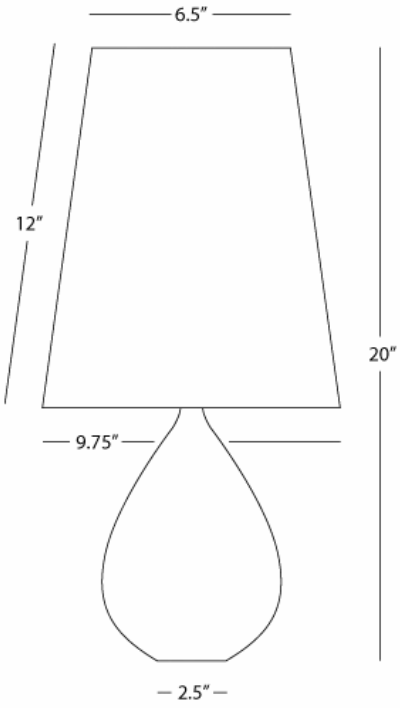
676 - Oyster Gray Silk Dupioni