JONATHAN ADLER

CLARIDGE

684B

Mini Tear Drop Accent Lamp

1-40W Max.

Bulb Type: B10 Candelabra

Switch: Hi-Lo Line Switch

Lead Crystal w/ Polished Nickel Accents

Black Silk Dupioni Shade w/ Rolled Edge Hem

SHADE OPTION:
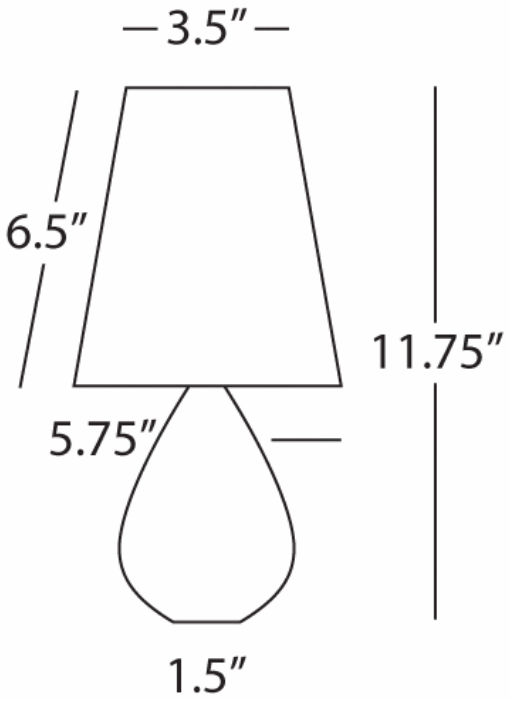
684 - Oyster Gray Silk Dupioni